GREEN SERIES OUTFIT			
Item	Specification	BM100	BM100PLUS
Optical System	Infinity Optical System	●	●
Eyepiece	10x(22)	●	●
Viewing Head	Infinite,Seidentopf 8inocular Viewing Head,Inclined at 45", Interpupillary 47-76mm	●	●
	Infinite,Seidentopf Trinocular Viewing Head,Inclined at 30", Interpupillary 47-78mm,Splitting ratio 5:5	O	O
	Wireless Digital Head with Built-in 5 Million Pixels	O	O
	Inclinable Binocular Viewing Head	—	O
Objective	Infinite Plan Objective NIS45	●	—
	Infinite Plan Objective NIS60	—	●
	Infinite Phase Contrast Objective NIS45	O	—
	Infinite Phase Contrast Objective NIS60	—	—
Nosepiece	Backward Quintuple Nosepiece(Non-coding)	●	—
	Backward Quintuple Nosepiece(Coding)	—	●
Synchronous belt Stage	Synchronous Bekt Stage 230mmx 150mm,Moving Range 78mmx 54mm	●	●
Condenser	Inserted Abbe Condenser NAI.25(Including Empty Plate]	●	●
	Bright Field-Phase Contrast Plate(4x-100xUniversal)	O	O
	Bright Field-Dark Field Plate	O	O
Focusing System	Coaxial Coarse and Fine Adjustment,Coarse Stroke 37.7mm per Rotation,Fine Stroke 0.2mm per Rotation,Fine division 0.002mm,Moving Range 30mm	●	●
Illumination	IW LED	●	
	3W S-LED(LCD Display Magnification,Timing Sleep.Brightness Indication and Lock,etc.)	—	●
Fluorescence attachment	3W LED,Two Wave Range(B,G,U,Vcan be combined),Fly-eye Lens Illumination	O	O
Accessories	1x Photo Attachment	O	O
	0.5x Photo Attachment	O	O
	Simple Polarization Set	O	O
	Camera	O	O
	App Software	—	O
Filter	Green	●	●

Note: ● Standard Outfit, O Optional

Add:Incheon city, Namdong guGansok 3 dong, Gansok L.H.1 danji, 105 dong 1301, South Korea
Phone: +82(0)1067606469
www.ge-biomed.co.kr Email: info@ge-biomed.co.kr

Dealer

Global Medical Engineering (BD) Ltd
17/2, Topkhana Road, Dhaka-1000. Bangladesh
Phone: +88 02 9564225
Email: info@gmebd.com

GE BIOMED
Medical System

BM 100/100 Plus

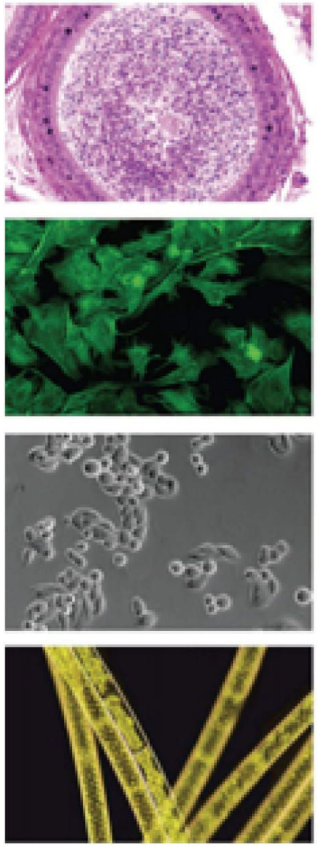

Green Green
Biological Microscope

Comfortable and Efficient, Various Observations,Intelligent,Environmentally Friendly

Excellent Optical Design

NIS Infinity Optical System

NIS infinity plan objectives can provide high contrast and very flat image up to FN 22. With FN 22 wide field eyepieces, the system always brings you sharp, excellent resolution and high signal to noise ratio imaging.

22mm Wide Field of View

The Green microscope achieves the wide field of 22mm view with lOX eyepieces for a more comprehensive observation content and faster sample observation. The eyepiece adopts a flat field distortion-free design to prevent the edge of the field from being imaginary and stray light.

Various Observation Methods

With the deepening of research in various fields, a single observation mode can no longer meet the daily scientific research work. As a continually upgradable microscope, Green can be extended on basic models to show a variety of observation capabilities.

Observation Methods	Bright Field	Dark Field	Phase Contrast	Fluorescent	Simple Polarizing
	●	●	●	●	●

Multifunctional Universal Condense

Green offers universal condensers for bright field, dark field and phase contrast. The obser vation methods could be quickly switched by switching the slider. The phase contrast and bright field slider is universal for 4x-100x objectives also, simple and fast to use. The N.A. value index on the aperture diaphragm of the condenser is easily set to get exact size of diaphragm to correspond with the different objectives.

LED EPI-Fluorescent Illumination

LED EPI- Fluorescent illumination is safety and convenient. You don' t need time to warm up or cool down. You don' t need to align the bulb, and the long lifetime of LED bulb is up to 5000 hours. There are two filters position available and switching is fast and easy.

Infinity Optics Objectives

Green is suitable for all kinds of microscopic using , especially for beginners and the users with long time micro-operation. The Green series of microscopes are fully optimized for the needs of such users. In terms of the objectives, the image quality and ease of use are achieved.

Plan Objective

By using infinity plan objectives, flat image with higher 1mag1ng reduction degree over the entire field of view cou Id be achieved.

Intelligent operating system

100x Water-immersion Objective

Ordinary lOOX oil-immersion objective needs to use cedar oil as the observation medium. After use, it needs to be cleaned with ether alcohol or xylene, which is easy to cause air pollution and improper cleaning. The water -immersion objective uses water as a medium to solve the above problems perfectly, reducing the damage to the body and environmental pollution.

40x LWD Objective

The working distance of 40x ob」ective can be up to 1.5mm, avoiding the erosion from residual immersion oil and water when converted from lOOx to 40x objective.

Coded Nosepiece

It can memorize the illumination brightness when using each objective. When different objectives are converted to each other, the light intensity is automatically adjusted to reduce visual fatigue and improve work efficiency.

Use a dimming knob to achieve multiple functions

One Click: Enter standby status

Double Clicks: Light lock or unlock upper Light Souce

Rotation: Adjust brightness

Press+ Up-spin: Switch to the the under light source

Press+ Down-spin: Switch to the under light source

Press 3 seconds: Set the time of turning off the light after leaving

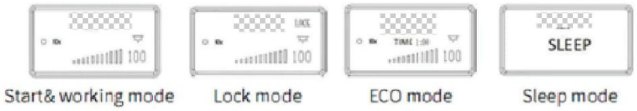

The display of microscope use state

The LCD on the front of the microscope can display the using status of the microscope, including magnification, light intensity sleepy model, and so on.

This is an unbounded microscope

Green has the multifunctional digital head, the user does not have to be confined in front of the microscope. Instead, it

can be used for mobile microscope teaching and outdoor field observation through mobile terminals and external mobile

power. The objective, eyepiece, and observation tube are effectively anti-mold treated, so you can

Multifunctional Digital Head

Built-in camera, supporting Android, 10S, Windows operating system, wired and W卩modes The image under the microscope can be output to the external device in real time, and there is no data line connection, and the operator can move more freely.

Professional microscopic imaging software

Microscopic imaging observation, analysis and processing can be performed on external devices, including photographing, measurement, image ad」ustment, storage, synthesis, etc.

Mobile devices perform image browsing and processing by scanning code

By scanning the QR code on the microscope, installing the APP and identifying the microscope, you can view the microscopic image on your phone and tablet.

External rechargeable battery

A USB charging port is reserved on the body, which can be used as a microscope power source. This microscope can also be used outside and during power outages to get rid of the microscope's dependence on the power outlet.

Easier to store, transport and accept

The microscope is compact and can be placed in an ordinary classroom closet. It has a special carrying handle, and is also lightweight and stable. The microscope back plate is designed with a hub device to effectively store the long power cord, improve the cleanliness of the laboratory, and reduce the tripping accident caused by the long power cord during the carrying process. The wooden storage box is an optional accessory that is very convenient for storage and carrying.

Ergonomic Design

In daily scientific research teaching and pathological diagnosis, working in front of the microscope for a long time has become the norm, and the consequent use fatigue often leads to physical discomfort, thereby reducing work efficiency and effectiveness. This Green microscope uses an ergonomic design, high eye-point, low-hand focus mechanism, lowhand stage and other ergonomic designs to ensure the user can perform microscope operation in the most comfortable situation .. The focus knob, illumination control knob and stage handle are all in close proximity. The user can put both hands on the table while working, and can operate Green with minimal movement.
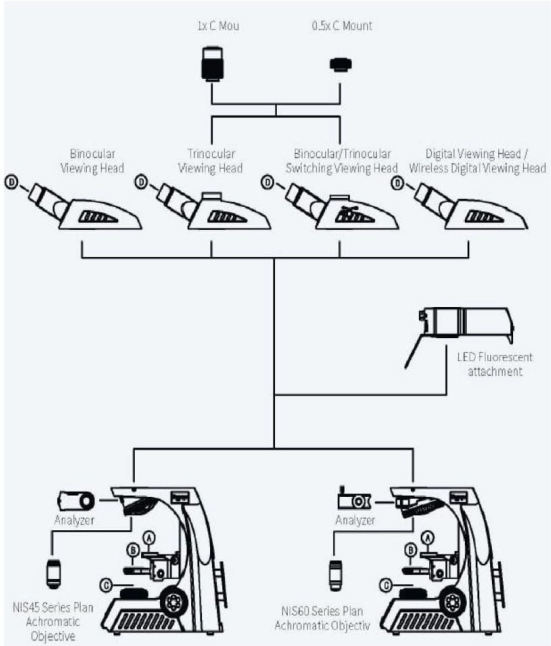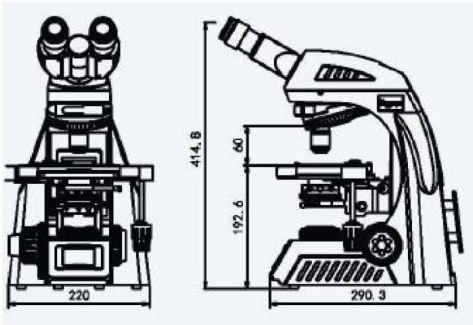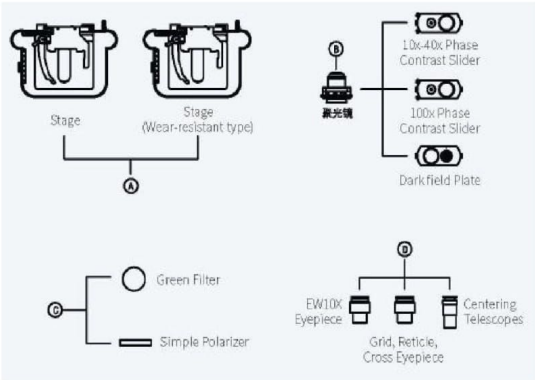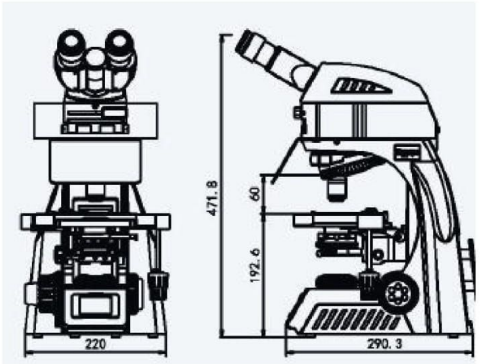
GREEN System Diagram